Tri-Agency Fusion Team Brief
Interagency Coordination Meeting
Improving Joint Operations

USACE/USGS/NWS
Silver Spring, MD

Friday, 11 June 2010

Fusion Team (Cell)

- USACE suggested team as a 2008 Midwest Flood after-action from the Rainfall-River Forecasting Summit (Oct 2008)
- Main area of focus, Mississippi River Basin

Member Agencies - USACE, USGS, NWS

•USACE members – 3 Divisions and 2 Districts

•USGS members – Nat'l Flood Coordinator and Data Chiefs from MO & LA Water Science Centers

•NWS members – 4 River Forecast Centers and 2 Regional HQs

Fusion Team Mission

The Fusion Team mission is to collaboratively develop a process for improving the accuracy of rainfall/river forecasts within the Mississippi River Basin employing the expertise and experience of the team's member agencies.

The ultimate goal is to optimize the accuracy and utility of the forecasts provided to the Public in accordance with all applicable regulations.

Issues cited from Oct 2008 Summit

- More effective communication and operations were needed between the agencies
- River observation and forecast discrepancies caused confusion
- Record levels extended beyond rating curves
- Needed levee information earlier
- Rainfall forecasts too low for heavy rain
- Flood Impact statements incorrect or inadequate

Issues cited from Oct 2008 Summit

- More effective communication and operations were needed between the agencies
- River observation and forecast discrepancies caused confusion
- Record levels extended beyond rating curves
  - Difficult to forecast records
- Needed levee information earlier
- Rainfall forecasts too low for heavy rain
- Flood Impact statements incorrect or inadequate

Fusion Team Focus Areas

- Enhance communication and coordination
- Ensure cross agency training and operations
- Ensure accurate data available concurrently to agencies
- Implement technical forecast improvements
- Track river forecast performance

Enhance Communications for Flood Operations

- Early adoption of NWS Chat
  - USGS encouraged use (May 2009)
  - Tri-agency test conducted prior to 2010 flooding
  - Expanded use in 2010 Midwest flood extremely beneficial
- Log operational issues on tri-agency extranet
- Optimize use of multi-agency briefings
  - Use Goto Meeting/Webinars, reduce multiple briefings
- Explore integrated use of GIS data
  - e.g., USACE Corps Maps into NWS Situational Awareness displays

Cross Agency Flood Operations

- Developed Flood Event Playbook
  - Used to plan Decision Support Services prior to 2010 Midwest flooding
- Developed and implemented plan to provide USGS and USACE liaisons to RFC
  - Improves communication with USGS/USACE
  - Coordinates rating curve extension needs
  - Relays levee information and breaks
- RFCs recently granted access to USACE levee database

Cross Agency Training

- USACE/NWS Forecaster Workshops
  - Use Fusion Team extranet input to focus workshop goals and objectives
- Use flood event playbook in real time and in joint exercises
- Use USGS flow measuring techniques to ensure interagency consistency
- Value of cross-training will be assessed

Accurate Data Available Concurrently to Agencies

- Causes for gage height differences between agencies discussed; some resolution in place
  - Drawdown curves used at some locations
    - USACE/NWS made operational changes to account for USGS corrections to data
  - Rating Curve corrections available on USGS Rating Depot, however timing of updates can be an issue for NWS and USACE
    - Evaluation is underway, to be discussed in July

Technical forecast improvements

- Develop rating curve extensions
  - In advance and in real time
- Co-develop HEC-RAS models for the Mississippi and Illinois Rivers

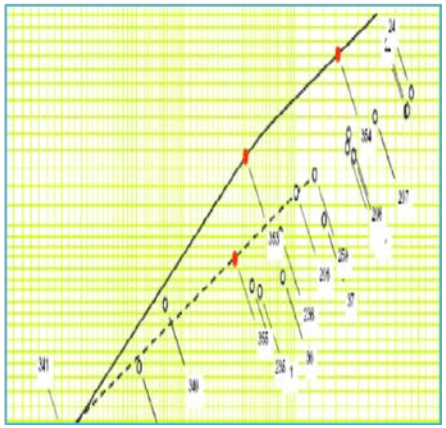

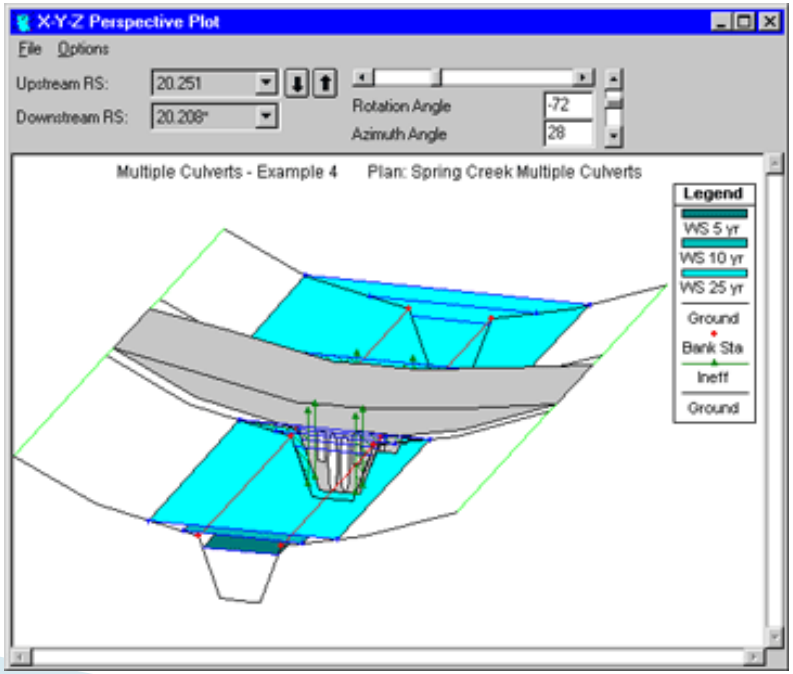

River Forecast Performance

- Need common accuracy metrics
- Exploring ways to unify use and presentation of common metrics (e.g., MAE)
- Extend verification to crests and low levels
- Extend metrics to specific local impacts
  - e.g., harbor closing level at St. Louis

Fusion Team – Path Forward
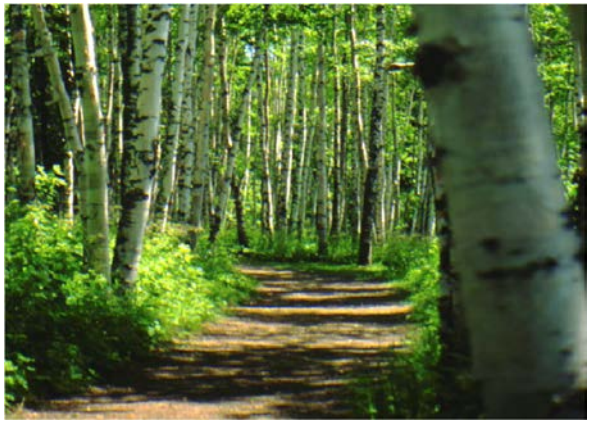
- IWRSS!
- Continue reaching out to stakeholders to obtain feedback & communicate progress
- Expand verification metrics
- Provide guidance to
  - Annual Tri-Agency Meetings
  - NWS/USACE Forecaster Workshops
  - Annual Water Control Meetings